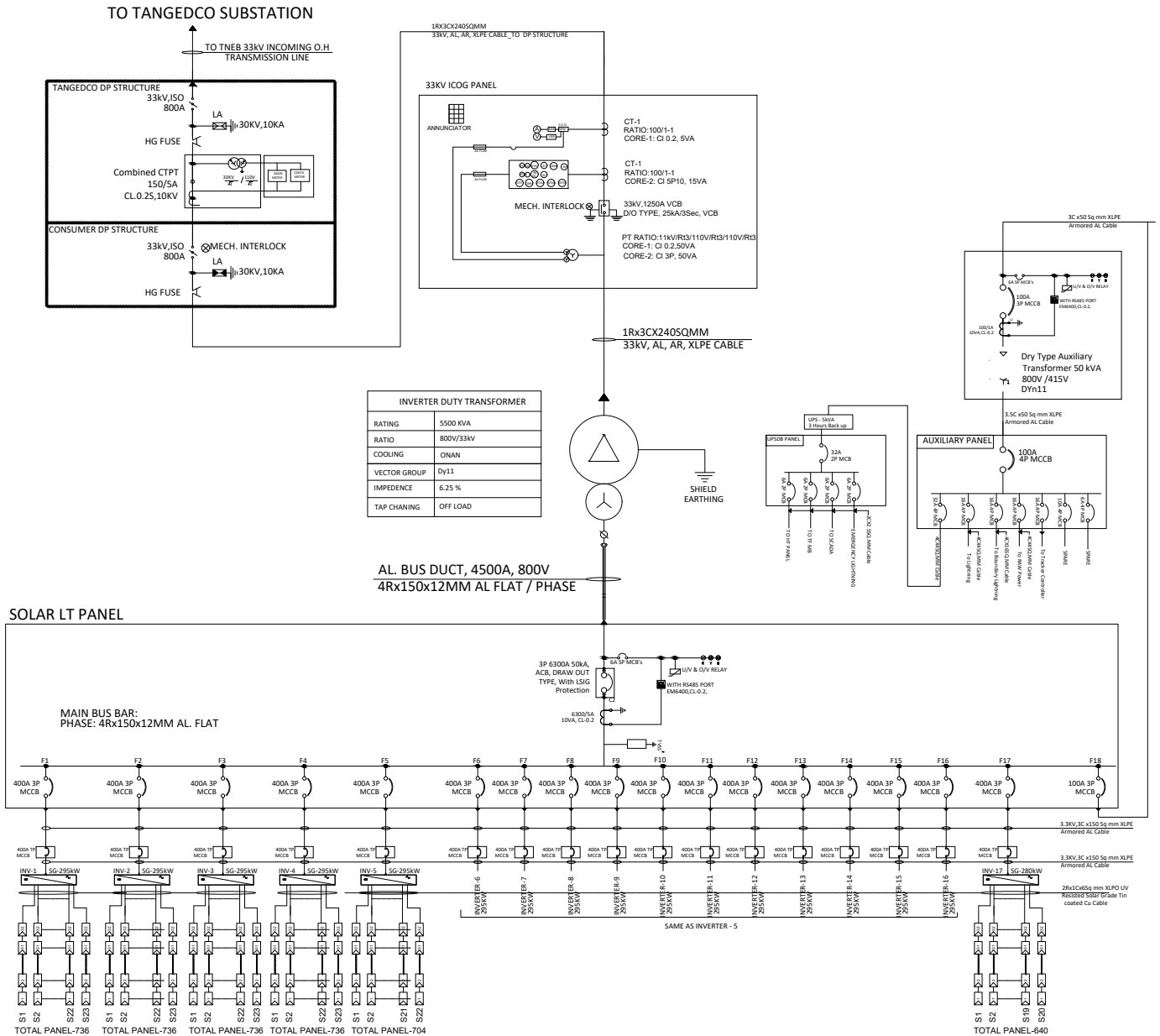

INVERTER DUTY TRANSFORMER	
RATING	5500 KVA
RATIO	800V/33kV
COOLING	ONAN
VECTOR GROUP	Dy11
IMPEDENCE	6.25 %
TAP CHANING	OFF LOAD

LEGENDS:

	INVERTER DUTY TRANSFORMER	80	DC SUPERVISION RELAY
	POTENTIAL TRANSFORMER	86	MASTER TRIP RELAY
	CURRENT TRANSFORMER		HG FUSE
52	VACUUM CIRCUIT BREAKER		MINIATURE CIRCUIT BREAKER
	SURGE ARRESTOR	94	ANTI PUMPING RELAY
	OUTDOOR ISOLATOR	95	TRIP CKT. SUPERVISION RELAY
ASS	AMMETER SELECTOR SWITCH	63X	IDT AUXILIARY RELAY
A	AMMETER	MFM	MULTIFUNCTION METER WITH IMPORT & EXPORT
VSS	VOLTAGE SELECTOR SWITCH		MOLDED CASE CIRCUIT BREAKER
V	VOLTMETER		PV MODULE
27	UNDER VOLTAGE RELAY	SMB	STRING COMBINER BOX
59	OVER VOLTAGE RELAY		SPD
50	INST. OVERCURRENT RELAY		30A-FUSE
50N	INST. EARTH FAULT RELAY		DC DISCONNECTOR
51	IDMT OVERCURRENT RELAY		ACB
51N	IDMT EARTH FAULT RELAY		INVERTER
63	BUCHCHOLZ RELAY		2 IN 1 OUT DCDB
	MECHANICAL INTERLOCK		

FLASYS DESIGN

CLIENT:

CONTRACTOR:

PROJECT SITE:

DRAWING TITLE :

DRAWING NO:

SCALE :	SIZE :	DATE :